TECHNICAL DATA SHEET ELECTRIC VIBRATOR

VIBRATOR TYPE: MVSS 10/200-S02 260/460 VOLTS THREE PHASES 60 Hz

ACBMV B. CASADIO VIBRATION
Z.I. Mi-Plaine
51 Rue Ampère
B.P. 31
69682 CHASSIEU CEDEX (FRANCE)
Tel.: 04 78 90 87 87 / Fax.: 04 78 90 87 88
Email: vibrateur@orange.fr
Internet: acbmv.com

6 POLES - 1200 RPM
REF.: 602285C
SIZE: 20
Certifications:

MECHANICAL AND ELECTRICAL SPECIFICATIONS

Eccentric weight setup (%)	Static moment (kgmm)	Working moment (kgcm)	Centrifugal force (kg)	Centrifugal force (kN)	Estimated bearings life time (hours)
100	163	32,60	264	2,59	75647
90	146,70	29,34	238	2,33	>100000
80	130,40	26,08	211	2,07	>100000
70	114,10	22,82	185	1,81	>100000
60	97,80	19,56	158	1,55	>100000
50	81,50	16,30	132	1,30	>100000
40	65,20	13,04	106	1,04	>100000
30	48,90	9,78	79	0,78	>100000
20	32,60	6,52	53	0,52	>100000
10	16,30	3,26	26	0,26	>100000

Power supply (volts)	460
Phases:	three phases
Frequency (Hz)	60 Hz
Rotation speed (RPM)	1200
Max input power (watt)	205
Max current (amp)	0,5
IS/IR	3,1

DIMENSIONAL SPECIFICATIONS (mm)

Vibrator weight: 22,5 kg
Continual service ambient temperature: -20°C à +40°C - Tropicalization anti-mold - Mechanical protection: IP66 IK08 according to IEC
Bearing type: BALL
Lubrication "FOR LIFE" with double protection screen

Fixing with 4 screws M12 - 1/2" quality 8.8 with tightening torque (kgm - ft/lb): 8 - 58
Power supply cable size: 9 à 16 mm - Cable entry thread: M25x1,5
Maintenance space: 91 mm

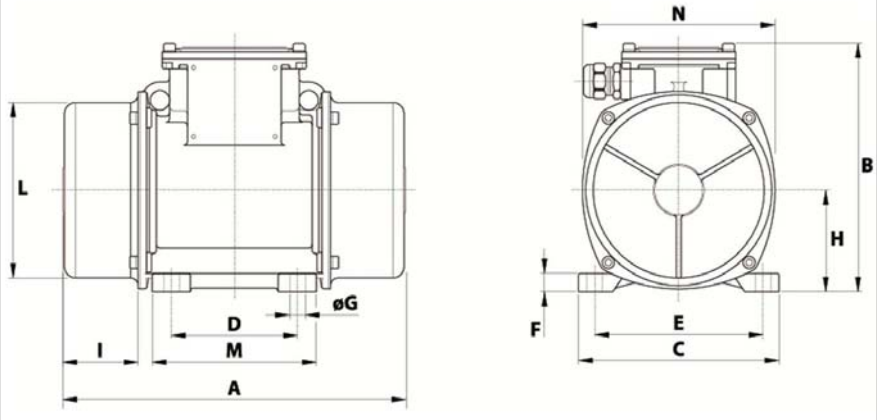

A	340
B	200
C	167
D	105
E	140
F	15
G	13
N° HOLES	4
H	82,5
I	91
L	143
M	137
N	160

This datas and outline drawings of this technical sheet are the property of ACBMV company. Don't reproduce or copy without authorization. This datas and outline drawings are intended to depict overall dimensions and do not necessarily represent the machine exterior. Information contained herein is subject to change without notice.