TECHNICAL DATA SHEET PNEUMATIC VIBRATOR

ACBMV B. CASADIO VIBRATION
Z.I. Mi-Plaine
51 Rue Ampère
B.P. 31
69682 CHASSIEU CEDEX (FRANCE)
Tel.: 04 78 90 87 87 / Fax.: 04 78 90 87 88
Email: vibrateur@orange.fr
Internet: acbmv.com

Roller vibratortype R65

Description:
Simply constructed high-frequency roller vibrators, wide range for many applications.

VIBRATING AND PNEUMATIC CARACTERISTICS

	2 Bars/29 PSI	4 Bars/58 PSI	6 Bars/87 PSI
Frequency (RPM)	19000	21000	26000
Force (N)	2730	4830	6120
Force (LBS)	614,86	1087,84	1378,38
Air cons. (l/min)	200	300	400
Air cons. (CF)	7,14	10,71	14,29

Typical applications:
- Emptying of hoppers and chutes
- Screen filters
- Conveying of particulates
- Preventing adhesions in pipelines and silos
- Transport of fine powders
- Compacting of plastic and concrete in troughs

Construction:
- Vibration created by a rotating precision-steel roller
- Shockproof plastic end plates
- Housing with 4 mounting bores, depending on the application

Properties:
- High motive power
- Rated frequency 19000 – 26000 RPM
- Centrifugal force 2730 – 6120 N
- Continuously variable (compressed air)
- Can be used at up to 150°C
- Resistant to extreme environmental conditions

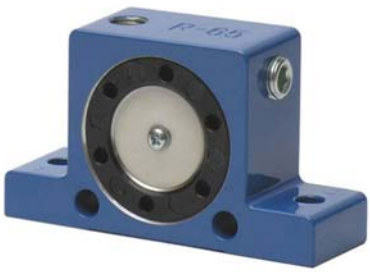

Design:
1 Housing made from extruded aluminium alloy
2 Cast iron strip
3 Steel roller
4 Plastic end plates
5 Vertical air entry
6 Horizontal air entry
7 Air channel
8 Air supply nozzles
9 Outlet openings
10 Outlet diffuser
11 Sound absorber plate
12 Base mounting bores

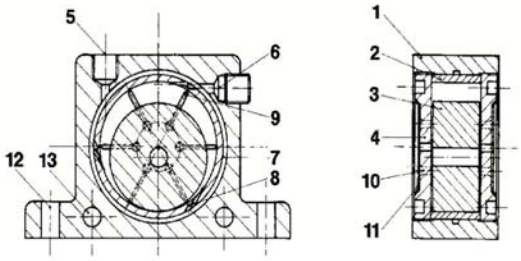

DIMENSIONAL SPECIFICATIONS

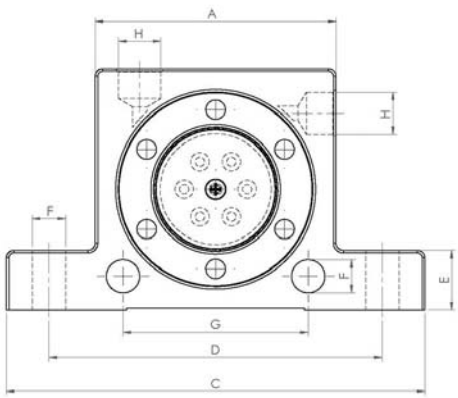

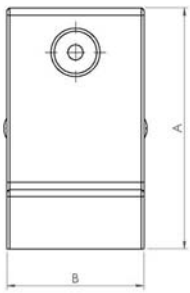

	mm	inch
A	65	2,56
B	37	1,46
C	113	4,45
D	90	3,55
E	16	0,63
F	9	0,35
G	50	50
H	G 1/4”	G 1/4”

	kg	LBS
Vibrator weight	0,545	1,211

This datas and outline drawings of this technical sheet are the property of ACBMV company. Don't reproduce or copy without authorization. This datas and outline drawings are intended to depict overall dimensions and do not necessarily represent the machine exterior. Information contained herein is subject to change without notice.