TECHNICAL DATA SHEET PNEUMATIC VIBRATOR

Knocker vibrator type FKL100SI

ACBMV B. CASADIO VIBRATION
Z.I. Mi-Plaine
51 Rue Ampère
B.P. 31
69682 CHASSIEU CEDEX (FRANCE)
Tel.: 04 78 90 87 87 / Fax.: 04 78 90 87 88
Email: vibrateur@orange.fr
Internet: acbmv.com

Description:
For powerful impacts at low operating pressure.

VIBRATING AND PNEUMATIC CARACTERISTICS

	3,5 Bars/50,75 PSI	7,5 Bars/108,75 PSI	
Working/strike (Nm)	10	50	
Impulsion/strike (Ns)	1	10,5	
Air cons. (l/min)	0,5	1,1	
Air cons. (CF)	0,02	0,04	

Typical applications:
Wide range of uses, including in the open air, and in wet or explosion risk areas. For knocking off material adhesions on container walls, such as in silos, hoppers, filter outlets, reactors and pipelines.

Construction:
Compressed air pushes a piston against a spring. When air pressure is rapidly vented, the piston shoots against a baffle plate. Mechanical impact regulation is provided by limiting the piston's stroke by means of an inserted threaded rod. Knocker housing

Properties:
- Wide range of settings for impact power and interval
- Impact force can be set pneumatically and/or by mechanical means
- Flexible range of applications

Design:
Housing made of hard-anodized aluminium alloy
Steel piston
Baffle plate made of impact-resistant plastic

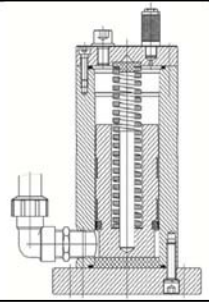

DIMENSIONAL SPECIFICATIONS

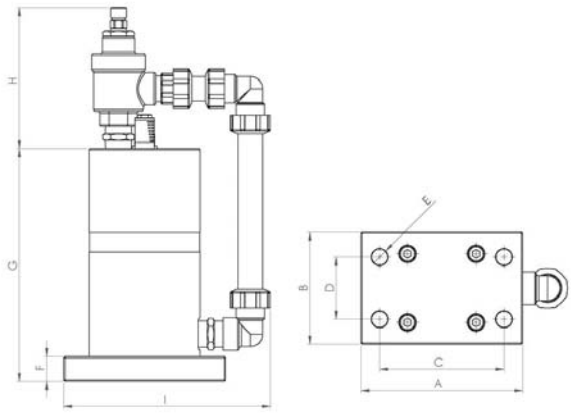

	mm	inch
A	130	5,12
B	90	3,55
C	100	3,94
D	50	1,97
E	13,6	0,54
F	20	0,79
G	187	7,37
H	113	4,45
I	166	6,54

	kg	LBS
Vibrator weight	4,5	10,000

This datas and outline drawings of this technical sheet are the property of ACBMV company. Don't reproduce or copy without authorization. This datas and outline drawings are intended to depict overall dimensions and do not necessarily represent the machine exterior. Information contained herein is subject to change without notice.