TECHNICAL DATA SHEET ELECTRIC VIBRATOR

VIBRATOR TYPE: MVSI 15/3000-S08 230/400 VOLTS THREE PHASES 50 Hz

ACBMV B. CASADIO VIBRATION
Z.I. Mi-Plaine
51 Rue Ampère
B.P. 31
69682 CHASSIEU CEDEX (FRANCE)
Tel.: 04 78 90 87 87 / Fax.: 04 78 90 87 88
Email: vibrateur@orange.fr
Internet: acbmv.com

4 POLES - 1500 RPM
REF.: 601268A
SIZE: 60

ATEX II 2D tD A21 IP 66 ZONE 21-22
Dust T°=135°C

Certifications:

MECHANICAL AND ELECTRICAL SPECIFICATIONS

Eccentric weight setup (%)	Static moment (kgmm)	Working moment (kgcm)	Centrifugal force (kg)	Centrifugal force (kN)	Estimated bearings life time (hours)
100	1235,00	247,00	3106	30,50	11779
90	1111,50	222,30	2795	27,45	16743
80	988,00	197,60	2485	24,40	24776
70	864,50	172,90	2174	21,35	38688
60	741,00	148,20	1864	18,30	64609
50	617,50	123,50	1553	15,25	>100000
40	494,00	98,80	1242	12,20	>100000
30	370,50	74,10	932	9,15	>100000
20	247,00	49,40	621	6,10	>100000
10	123,50	24,70	311	3,05	>100000

Power supply (volts)	400
Phases:	three phases
Frequency (Hz)	50 Hz
Rotation speed (RPM)	1500
Max input power (watt)	1900
Max current (amp)	3,80
IS/IR	6,50

DIMENSIONAL SPECIFICATIONS (mm)

Vibrator weight: 80,0 kg
Continual service ambient temperature: -20°C à +40°C - Tropicalization anti-mold - Mechanical protection: IP66 IK08 according to IEC
Bearing type: ROLLER
Lubrication LONG-LIFE with KLUEBER STABURAGS NBU 8EP.
Re lubrication quantity after 1000 hours of using: 19g
Max quantity by replaced bearing: 35g
Fixing with 4 screws M20 - 13/16" quality 8.8 with tightening torque (kgm - ft/lb): 38 - 275
Power supply cable size: 9 à 16 mm - Cable entry thread: M25x1,5
Maintenance space: 177 mm

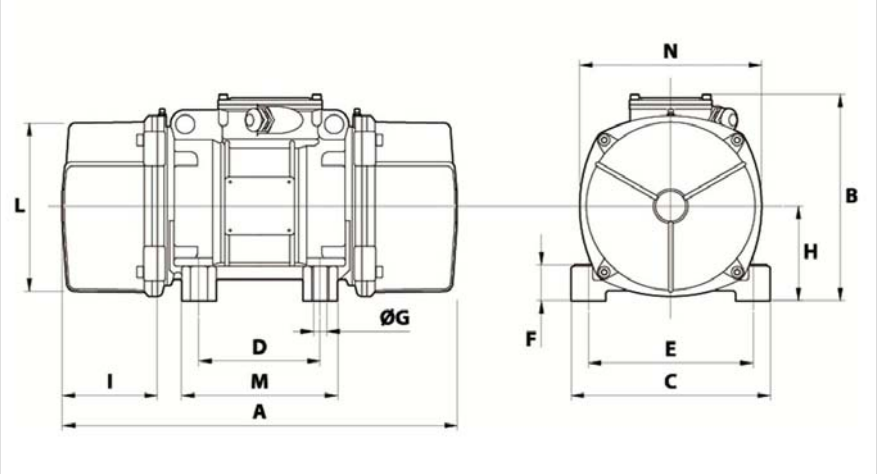

A	617
B	272
C	275
D	155
E	225
F	70
G	22
N° HOLES	4
H	130
I	177
L	238
M	210
N	253

This datas and outline drawings of this technical sheet are the property of ACBMV company. Don't reproduce or copy without authorization. This datas and outline drawings are intended to depict overall dimensions and do not necessarily represent the machine exterior. Information contained herein is subject to change without notice.