TECHNICAL DATA SHEET ELECTRIC VIBRATOR

VIBRATOR TYPE: MVSI 075/2110-S02 230/400 VOLTS THREE PHASES 50 Hz

ACBMV B. CASADIO VIBRATION
Z.I. Mi-Plaine
51 Rue Ampère
B.P. 31
69682 CHASSIEU CEDEX (FRANCE)
Tel.: 04 78 90 87 87 / Fax.: 04 78 90 87 88
Email: vibrateur@orange.fr
Internet: acbmv.com

8 POLES - 750 RPM
REF.: 602891A
SIZE: 70

ATEX II 2D tD A21 IP 66 ZONE 21-22
Dust T°=135°C

Certifications:

MECHANICAL AND ELECTRICAL SPECIFICATIONS

Eccentric weight setup (%)	Static moment (kgmm)	Working moment (kgcm)	Centrifugal force (kg)	Centrifugal force (kN)	Estimated bearings life time (hours)
100	2326,00	465,20	1463	14,40	42000
90	2093,40	418,68	1317	12,96	59627
80	1860,80	372,16	1170	11,52	88466
70	1628,20	325,64	1024	10,08	>100000
60	1395,60	279,12	878	8,64	>100000
50	1163,00	232,60	732	7,20	>100000
40	930,40	186,08	585	5,76	>100000
30	697,80	139,56	439	4,32	>100000
20	465,20	93,04	293	2,88	>100000
10	232,60	46,52	146	1,44	>100000

Power supply (volts)	400
Phases:	three phases
Frequency (Hz)	50 Hz
Rotation speed (RPM)	750
Max input power (watt)	1500
Max current (amp)	4,10
IS/IR	3,55

DIMENSIONAL SPECIFICATIONS (mm)

Vibrator weight: 130,0 kg
Continual service ambient temperature: -20°C à +40°C - Tropicalization anti-mold - Mechanical protection: IP66 IK08 according to IEC
Bearing type: ROLLER
Lubrication LONG-LIFE with KLUEBER STABURAGS NBU 8EP.
Re lubrication quantity after 1000 hours of using: 18g
Max quantity by replaced bearing: 32g
Fixing with 4 screws M22 - 7/8" quality 8.8 with tightening torque (kgm - ft/lb): 56 - 411
Power supply cable size: 9 à 16 mm - Cable entry thread: M25x1,5
Maintenance space: 178 mm

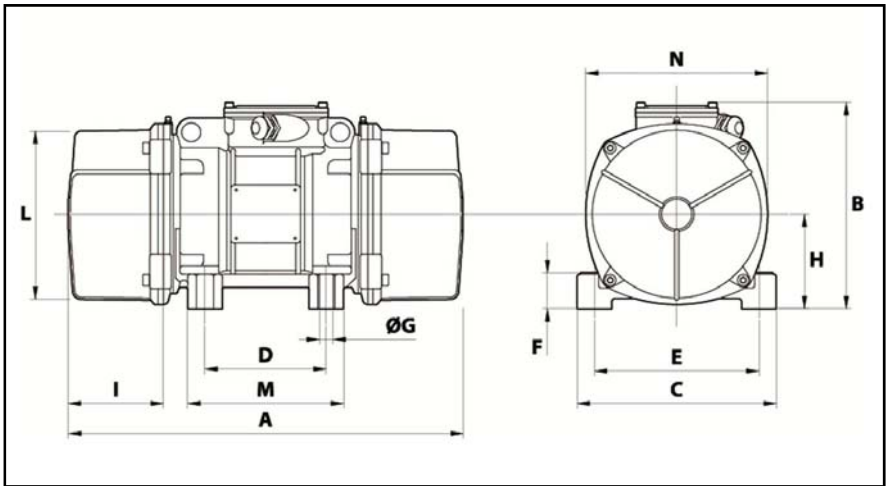

A	666
B	321
C	310
D	155
E	255
F	77
G	24
N° HOLES	4
H	157
I	178
L	277
M	215
N	295

This datas and outline drawings of this technical sheet are the property of ACBMV company. Don't reproduce or copy without authorization. This datas and outline drawings are intended to depict overall dimensions and do not necessarily represent the machine exterior. Information contained herein is subject to change without notice.