TECHNICAL DATA SHEET PNEUMATIC VIBRATOR

ACBMV B. CASADIO VIBRATION
Z.I. Mi-Plaine
51 Rue Ampère
B.P. 31
69682 CHASSIEU CEDEX (FRANCE)
Tel.: 04 78 90 87 87 / Fax.: 04 78 90 87 88
Email: vibrateur@orange.fr
Internet: acbmv.com

Turbine vibrator type GT36S EX

CE EX II 2 G/D c T6 T85°C

Description:
High speed and eccentric working torques for strong vibration. Wide range.

VIBRATING AND PNEUMATIC CARACTERISTICS

	2 Bars/29 PSI	4 Bars/58 PSI	6 Bars/87 PSI
Frequency (RPM)	6100	7200	8300
Force (N)	4100	6200	7500
Force (LBS)	923,42	1396,40	1689,19
Air cons. (l/min)	330	530	745
Air cons. (CF)	11,79	18,93	26,61

Typical applications:
- Bunker emptying
- Screen filter
- Vibrating tables
- Preventing adhesions in pipelines and silos
- Moving of bulk materials

Construction:
- Vibration from the centrifugal force of positive and negative unbalanced torques in the rotor.
- Rotor on two pre-lubricated and enclosed ball bearings arranged in pairs. Lubricated with special grease for long life.

Properties:
- Lubrication free
- Extremely quiet
- Strong vibration from high speeds and eccentric working torques
- Nominal frequency 6100 à 8300 RPM
- Centrifugal force 4100 – 7500 N
- Continuously variable (compressed air)
- Can be used at temperatures up to 150°C
- Resistant to extreme environmental conditions

Design:

1 Housing made from extruded aluminium alloy
2 Turbine wheel made from surface-hardened aluminium
3-4 high-density inserts: positive torque
5-7 openings for achieving negative torque
8 Air supply
9 Air outlet
10 Base mounting bores
11 Pre-lubricated and enclosed ball bearings arranged in pairs

Surface-hardened aluminium end plates
12 with left-hand thread
13 with right-hand thread

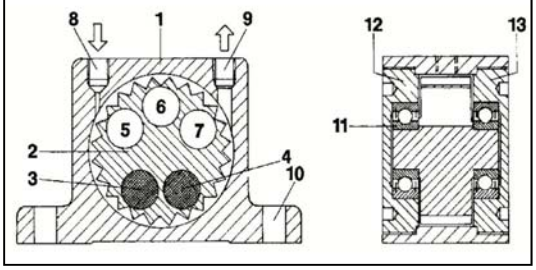

DIMENSIONAL SPECIFICATIONS

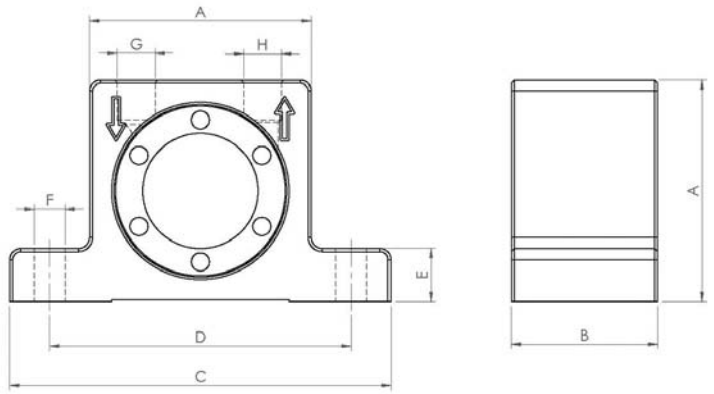

	mm	inch
A	100	3,94
B	73	2,88
C	160	6,30
D	130	5,12
E	20	0,79
F	11	0,43
G	G 3/8"	G 3/8"
H	G 3/8"	G 3/8"

	kg	LBS
Vibrator weight	2,53	5,622

This datas and outline drawings of this technical sheet are the property of ACBMV company. Don't reproduce or copy without authorization. This datas and outline drawings are intended to depict overall dimensions and do not necessarily represent the machine exterior. Information contained herein is subject to change without notice.